- (A) WATER FILLER CAP FRESH WATER
- (B) OIL FILLER CAP, ENGINE
- (C) OIL DIP STICK, ENGINE
- (D) OIL DRAIN (WITH PUMP), ENGINE
- (E) OIL FILTER
- (F) LIFTING DEVICE
- (G) WATER DRAIN, FRESH WATER
- (H) WATER DRAIN, SEA WATER
- (I) AIR FILTER
- (J) FUEL FILTER
- (K) HEAT WATER OUTLET PRESSURE SIDE 1/2-14 NPSF
- (L) HEAT WATER OUTLET SUCTION SIDE 1/2-14 NPSF
- (M) WATER INLET FOR PIPE ⌀1.25 I.D
- (N) WATER COOLED EXHAUST PIPE FOR HOSE ⌀3,5 I.D
- (O) CONNECTION BOX
- (P) OILCOOLER, REVERSE GEAR
- (Q) OIL DIPSTICK, REVERSING GEAR
- (R) OIL SUCTION FILTER REVERSING GEAR
- (S) GEAR CONTROL CABLE
- (T) CENTRE OF GRAVITY
- (U) OIL DRAIN REVERSING GEAR (WITH PUMP)

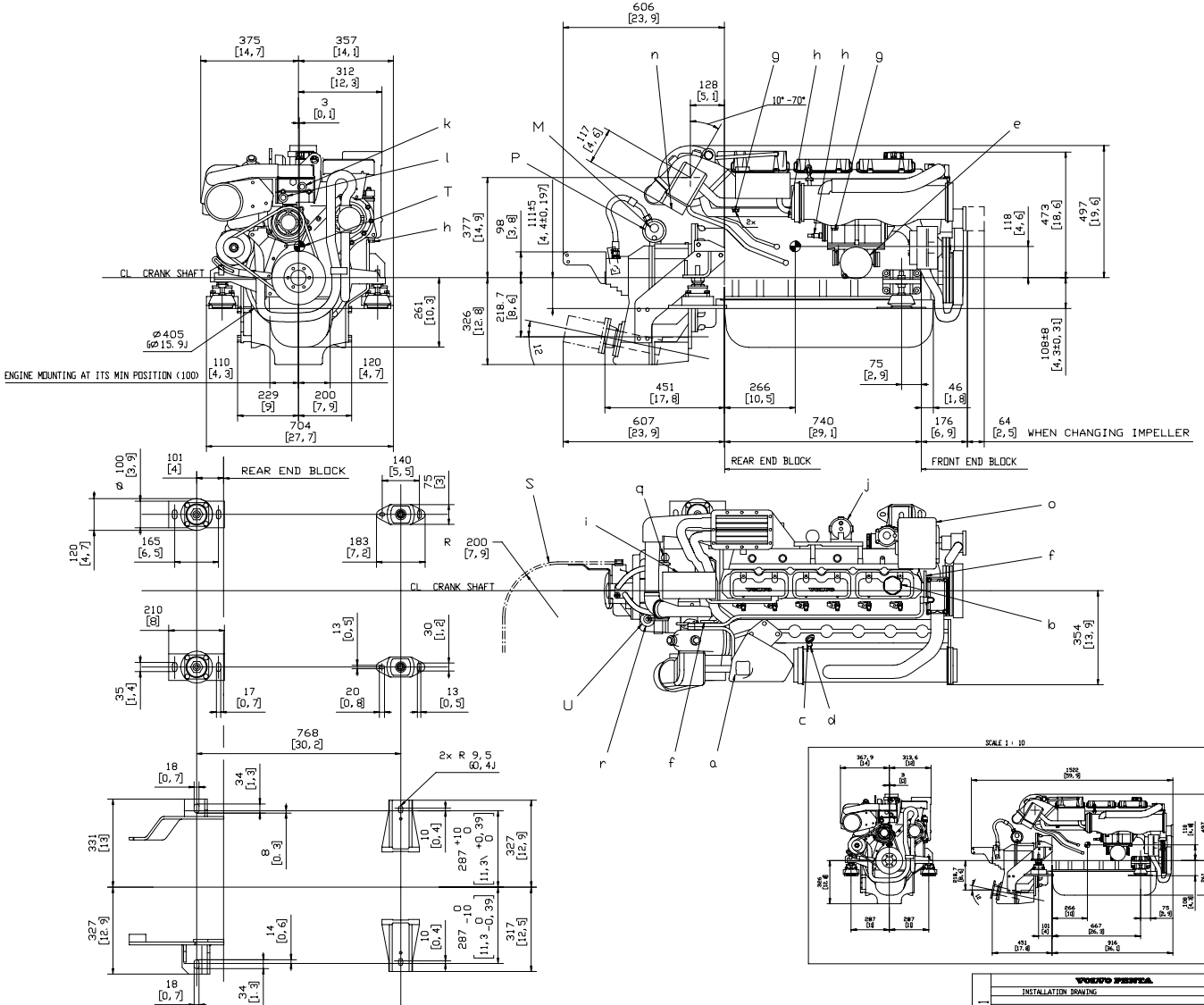

DIMENSION IN MILLIMETRES AND INCHES

VOLVO PENTA			
INSTALLATION DRAWING			
3590341			
SCALE 1 : 5	TYPE	TAMD41H / P-HS63V	
DRAWN TM 980329			
CHECKED MK 980414	DRAWING NO	3590341	02
APPROVED PC 980415			