THIS DRAWING IS THE PROPERTY OF AB VOLVOPENTA - GOTEBORG, SWEDEN AND MAY NOT BE REPRODUCED OR MADE AVAILABLE TO ANY PERSON OR COMPANY WITHOUT WRITTEN PERMISSION FROM AB VOLVOPENTA

CAD

- (A) WATER FILLER CAP FRESH WATER
- (B) OIL FILLER CAP, ENGINE
- (C) OIL DIP STICK, ENGINE
- (D) EDC CONTROLUNIT
- (E) OIL DRAIN (WITH PUMP), ENGINE
- (F) OIL FILTER
- (G) LIFTING DEVICE
- (H) WATER DRAIN, FRESH WATER
- (I) WATER DRAIN, SEA WATER
- (J) AIR FILTER
- (K) FUEL FILTER
- (L) HEAT WATER OUTLET 1/2-14 NPSF
- (M) HEAT WATER INLET 1/2-14 NPSF
- (□) ELECTRICAL BOX
- (P) FILTER SEA WATER
- (R) OIL DIP STICK OUTBOARD DRIVE
- (T) CENTRE OF GRAVITY
- (U) WATER INLET
- (V) TIE BAR
- (X) STEERING CABLE FOR POWER STEERING
- (Z) OIL DRAIN OUTBOARD DRIVE
- AA X-MEASUREMENT ENT., SEE DWG 7733849

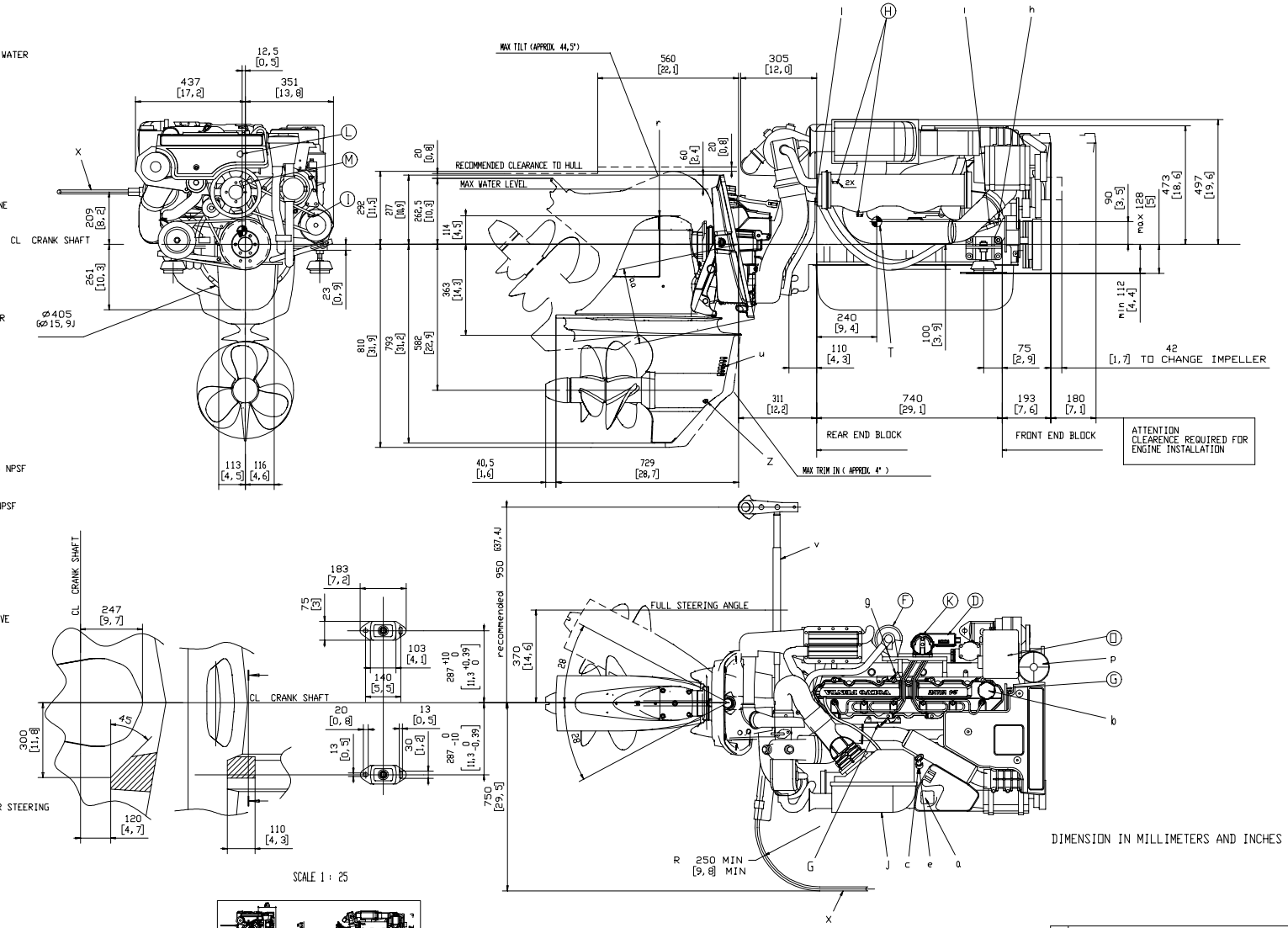

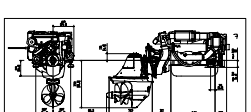

VOLVO PENTA			
INSTALLATION DRAWING			
3590619			PROJ.
SCALE 1 : 5	TYP TYPE KAD 300/DPG		
DRAWN AS/TK 000215			
CHECKED KT 010200	DATE NO DRAWING NO 3590619	REV 02	
APPROVED			
CONTROL			
AUTHORITY			