VOLVO PENTA INBOARD DIESEL

D4-260

NEW!

191 kW (260 hp) crankshaft power acc. to ISO 8665

Exceptional diesel performance for its size

Volvo Penta's new 4-cylinder D4-260 is developed from the latest design in modern diesel technology. The engine has common rail fuel injection system, double overhead camshafts, 4 valves per cylinder, turbocharger and aftercooler. Together with a large swept volume and the EVC system (Electronic Vessel Control), this results in world-class diesel performance, combined with low emissions. The engine is extremely compact for its high output.

D4-260 with HS63AE reverse gear

World-class performance

The common rail fuel injection system, controlled by EVC, in combination with a large swept volume, ensures outstanding torque during acceleration, with virtually no sign of smoke. This matched with the engine's high load carrying capability creates a sporty feeling and power, when needed.

Compact and robust

The engine is extremely compact for its large swept volume and high output. With the rear-end transmission, driving the high-pressure injection pump and the camshafts, a high degree of integrated systems, a high-efficiency aftercooler, a marinization performed with very few hoses, and a fully symmetric engine, the package simply gets that compact.

The rigid cast-iron cylinder block and head, combined ladder frame and balance shafts, and exactly controlled (up to three steps) fuel injection gives excellent onboard comfort with low noise and vibration levels.

EVC/EC – Plug and go

EVC Electronic Vessel Control is the latest development in engine control and instrumentation for Volvo Penta marine engines. It offers a higher level of integration in your boat: electrical shift and throttle for smooth and safe control, a complete new range of easy to read, data link gauges, a large LCD display and much more, everything in just one CAN cable.

EVC makes boating easier and safer, offering twin engine synchronisation. EVC is scalable from one station up to four, from a classic dashboard up to an advanced driver information system. EVC works closely together with the engine management system offering you constant power output regardless of temperature (5–55°C/41–131°F) and quality of the fuel. The system is built on the latest automotive technology with waterproof connectors, so it's just plug and go.

A propulsion package fully matched, tested and supported by one company

Volvo Penta's hydraulically shifted reverse gear has been specially developed with a view to increasing the standard of comfort on board.

Matched with the characteristics of the D4 engine, the hydraulic shifting mechanism and a gear technology that uses bevel gears throughout the gear train, we have developed a complete package for high torque, operational reliability and reduction of engine noise and vibrations.

The combination of 8° down angle, large drop center and small dimensions provides for optimized installations. V-drives are also availble.

In order to get full benefit of the EVC system the reverse gear is equipped with electric shifting valve.

Meeting new emission standards

The common rail injection system in combination with electronics and an advanced combustion system are setting new standards in minimizing noxious emissions and particles. The engine will meet future comprehensive emission requirements to be introduced in Europe and the US in 2006.

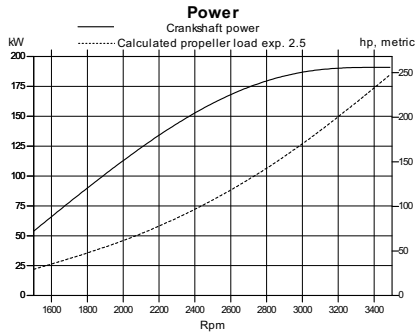

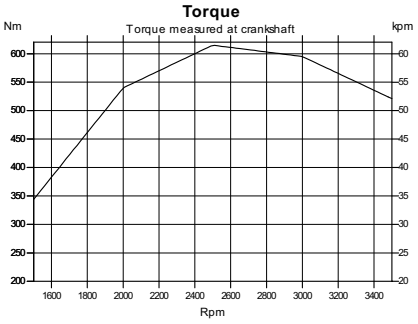

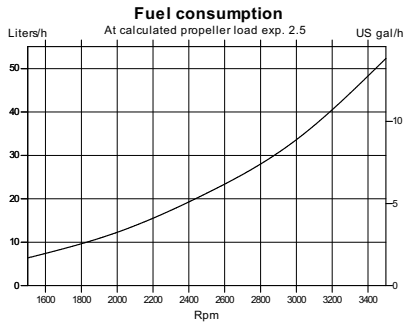

VOLVO PENTA

D4-260

Technical description:

Engine block and head
- Cylinder block and cylinder head made of cast-iron
- Combined ladder frame and balance shafts
- 4-valve technology with hydraulic lash adjusters
- Double overhead camshafts
- Oil-cooled pistons with two compression rings and one oil scraper ring
- Integrated cylinder liners
- Replaceable valve seats
- Five-bearing crankshaft
- Rear-end transmission

Engine mounting
- Flexible engine mounting

Lubrication system
- Easily replaceable separate full-flow and by-pass oil filter
- Seawater-cooled tubular oil cooler

Fuel system
- Common rail fuel injection system
- Control unit for processing the injection
- Fine filter with water separator
- Emergency stop device

Air inlet and exhaust system
- Air filter with replaceable insert
- Crankcase gases vented into the air inlet
- Exhaust elbow or exhaust riser
- Freshwater-cooled turbocharger

Cooling system
- Thermostatically regulated freshwater cooling
- Tubular heat exchanger with separate large volume expansion tank
- Coolant system prepared for hot water outlet
- Easily accessible seawater impeller pump

Electrical system
- 12V two-pole electrical system
- 115A marine alternator with Zener-diodes to protect the system from peak voltage, and integrated charging regulator with battery sensor cable for maximum use of alternator
- Fuses with automatic reset

Instruments/control
- Complete instrumentation including key switch and interlocked alarm
- EVC monitoring panels for single or twin installations
- Electronic remote control for throttle and shift
- Plug-in connections

Reverse gear
- Reverse gear with matched drop center and 8° down angle for compact installation and minimum propeller shaft angle. V-drive available.
- Bevel gears which results in smooth running at all speeds
- Hydraulically operated clutch for smooth shifting
- Electrical shifting performed by electromagnetic valves
- When under sail propeller shaft can rotate 24 hours without engine start
- Seawater-cooled oilcooler

Accessories
An extensive range of accessories are available. For detailed information, please see Accessory catalogs.

Contact your local Volvo Penta dealer for further information.

Not all models, standard equipment and accessories are available in all countries. All specifications are subject to change without notice.

The engine illustrated may not be entirely identical to production standard engines.

Technical Data

Engine designation	**D4-260 I**
Crankshaft power, kW (hp)	191 (260)
Propeller shaft power, kW (hp)	186 (253)
Engine speed, rpm	3500
Displacement, l (in³)	3.7 (226)
Number of cylinders	4
Bore/stroke, mm (in.)	103/110 (4.05/4.33)
Compression ratio	17.5:1
Dry weight with HS63AE, kg (lb)	558 (1230)
Ratio HS63AE	2.52:1, 2.04:1, 1.56:1
Ratio HS63VE	2.48:1, 1.99:1, 1.56:1

Duty rating: R5
Technical data according to ISO 8665. Fuel with a lower calorific value of 42,700 kJ/kg and density of 840 g/liter at 15°C (60°F).
Merchant fuel may differ from this specification which will influence engine power output and fuel consumption.
The engine will meet future comprehensive emission requirements to be introduced in Europe and the US in 2006.

Dimensions D4-260/HS63AE
Not for installation

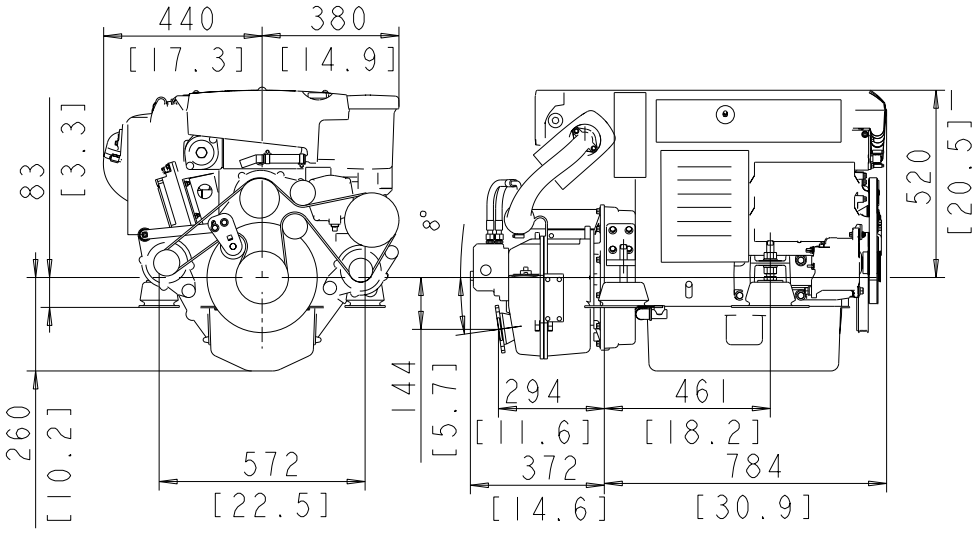

AB Volvo Penta
SE-405 08 Göteborg, Sweden
www.volvopenta.com

05-2004. © 2004 AB Volvo Penta.